Yaşar University

ESE 4811 Internship

Firm:

Name-Surname of the Student	Student Number

Date :

STAJ RAPORU BİLDİRİMİ

Rapor içindeki bütün bilgilerin etik davranış ve akademik kurallar çerçevesinde elde edilerek sunulduğunu, ayrıca staj rapor yazım kurallarına uygun olarak hazırlanan bu çalışmada bana ait olmayan her türlü ifade ve bilginin kaynağına eksiksiz atıf yapıldığını bildiririm.

(İmza)

(Adı Soyadı)

CONTENTS

LIST OF TABLES

TABLE OF FIGURES

SYMBOLS AND ABBREVIAVTIONS

The symbols and abbreviations used in this work are below with explanation.

Symbols	Explanation
h	Enthalpy, kj/kg
u	Internal Energy, kj/kg
P	Pressure, MPa
T	Temperature, K, ˚C
W	Work
Q	Heat Energy

Abbreviations	Explanation
MW	Megawatt
TOE	Tone of Oil Equivalent
MOIZ	Manisa Organized Industry Zone
MOSB	Manisa Organize Sanayi Bolgesi

TABLE OF APPENDIX

1. Summary of the Internship

I completed my internship at Ege Seramik between 1 July and 15 August. During my internship, I conducted research on the cogeneration system and observed the system. Cogeneration systems are combined energy systems where electricity and heat are produced together by burning other fuels, especially natural gas, in an engine or turbine. In other words, cogeneration is the production of energy from the same system simultaneously in both electricity and heat forms and making them available to the enterprises. In this context, we can say that the greatest purpose of cogeneration is to make the most of primary fuel energy. Cogeneration is the technology that enables the generation of electricity and heat together in order to use energy more efficiently. A gas turbine or engine operating in a simple cycle, ie producing only electricity; it can convert 35-45% of the energy it uses into electricity. If this system is used in the form of cogeneration, most of the heat energy that will be discharged from the system can be converted into usable energy and the total energy input can be evaluated at a rate of 85-95%.During the internship, the tasks of the components in the cogeneration system were learned. Obtained information about electricity generation. In Ege Seramik cogeneration system, electricity production is provided by three turbines. Two of these were built in 1998 and the turbines have a power of 4.24 MW. The other turbine was built in 1996 and has a power of 4.6 MW. The power of the plant is approximately 13.08 MW. Maintenance and repair of turbines and systems is an important factor for electricity generation. During the maintenance of one of the turbine was observed. Learned about circuit breakers, amplifiers and transformers. System operation starts by spraying fuel. After the combustion of compressed air and natural gas occurs, the gases generated go to the turbine and cause the movement of the vanes. In this way, the turbine starts to rotate. The generated power is sent to the alternator. The electrical energy obtained from all three turbines feeds the main busbar in our power plant. In this way, the electrical energy needs of the factory are met. The hot gas in the combustion chamber is discharged from the exhaust. This gas is fed to seven spray dryers. A portion of the hot gas exiting the exhaust is also conveyed by pipelines to two heat exchangers and converted into hot water. During this internship, showed how to measure each input and output step of the cogeneration energy system. Information about the day ahead market used by the factory was obtained. Although the production at Ege Seramik changes seasonally, 250.000 kWh of electricity is produced daily. This production is approximately 8,000,000 kWh per month. Electricity generation and distribution works as a stock exchange. Data recorded per hour are evaluated on a daily basis according to established standards. The maximum demand is between 17:00 and 22:00. Monthly values were calculated and energy efficiency was calculated. Information was given about switching the system to island mode during

power outages. The components of the system were examined in the fields. After the components were learned, thermodynamic analysis was performed as calculation. Mass balance, energy balance and entropy balances were examined.

2. Description of the Company/Institution

Figure 1: Top view of Ege Seramik

Ege Seramik industry and trade inc. established in Izmir by Ibrahim Polat in 1972. Production in 1975, after the 90s, especially in infrastructure, technology, design and quality standards with emphasis on stable investment and growth, perseverance, and industry innovations with the sector today is one of the most important companies that dominate. Aegean United Energy Electricity Generation Inc. In 1996, the power plant with a power of 4.6 MW started to be used in Ege Seramik campus in Kemalpaşa, Izmir, in order to meet the energy needs of its partners. In 1998, in line with the increasing energy needs of its partners, two units with a power of 4.24 MW were put into service, reaching a total power of 13.08 MW.

The factory power requirement is about 12 MW and the power generation is about 13 MW. It holds validity for sea level and 15 degrees temperature. The hot gas produced by the turbines (485-510 º C) is fed by pipelines through 7 spray dryer units of Ege Seramik factory and two heat exchangers providing 90 º C hot water and 135 º C hot water. There are 19 transformers in total. Of these, five are in cogeneration and twelve are in distribution. There are two raw material distribution transformers outside the main factory. 1 engineer 6 technicians are involved in the operation and maintenance of the cogeneration plan. Factory address is Kemalpaşa OSB Ansızca industry area No: 297/1 35730 Kemalpaşa / İzmir – Türkiye. Mail address is kojenerasyon@egeseramik.com and relevant web links is www.egeseramik.com

Ege Seramik is the first company in its sector to receive ISO 9001 certification. ISO 14001 Environmental Management System certificate is another document owned by the company. Ege Seramik holds French standard NF UPEC certification.

In 2015, the opening ceremony of Turkey's first environmentally sensitive and natural gas consumption reducing production facilities was held. The emerging market groups by identifying their needs and expectations that are appropriate to the product Ege Seramik continuously ongoing investments in this area, the renovated facilities in Turkey's first eco ceramic cooking ovens, robots, unmanned forklifts, automatic packaging machines, pallet stacking robots, granule shaping facilities after coloring, pallet wrapping and strapping lines commissioned. The factory sells its products at home and abroad. In addition, the factory sells electricity generated from turbines through its cogeneration system. **[5]**

3. Internship Activities

3.1 Electricity Generation Through Cogeneration System

Electricity and heat are the most important types of resources the world needs, often obtained by classical systems, used in both life and industry. Cogeneration systems, which provide high efficiency of these resources by taking into account the reductions in primary energy sources, have emerged as an important Sunday in the world in recent years.

Cogeneration is the production of compound heat and power with a simple expression, and high efficiency systems that enable electricity and heat to be produced together from a single fuel source. Cogeneration systems have many advantages compared to classical systems. The most important is to achieve both high efficiency and reduce the waste emissions generated by combustion to minimum levels. It was determined that the efficiency in electricity generation is about 40% and the efficiency in heat boilers is 90% and the total efficiency is about 60%. In the cogeneration system, the efficiency in electricity production is 40-45% and the efficiency in heat energy production is between 45-50%, indicating that the total efficiency is 85-90%. The efficiency difference between cogeneration and classical systems can be shown both to convert waste heat into usable energy and to minimize losses due to the fact that energy production in cogeneration systems is near the place of consumption. **[3]**

Cogeneration is a technology that contributes to a sustainable life and environmental quality by efficient use of energy both by reducing the amount of wasted energy and by minimizing the negative environmental effects that may arise from energy consumption. Cogeneration can be done with various fuels such as coal, petroleum derived fuels, natural gas and biomass fuels.

3.2 Gas Turbines Working Principle

Gas turbines are composed of three main parts: compressor, combustion chamber and turbine. The air in the atmosphere is absorbed by the compressor and compressed with a pressure of 6-12 bar. The temperature increases due to compression. The air then enters the combustion chamber, mixing with the fuel injected by the fuel nozzles. The burning fuel raises the gas (air combustion gases) temperature under constant pressure. The superheated gases expand along the turbine that the mechanical work can achieve and rapidly strike the turbine blades to provide rotation. Part of this mechanical work is used to operate the compressor. The remaining work is transmitted to the output shaft and the rotor in the alternator is turned by the gearbox. At the end of these steps electricity is produced. **[4]**

3.3 Production

3.3.1 Stages of Ceramic Production In The Organization

First, the soil mixture is obtained for the production of ceramics. This mixture is sent to the mills and milled. The fine mixture is stored as sludge in large ponds. Sludge is pumped from base to top through nozzles into spray dryers with a pressure of 30 bar. There are seven spray dryers in total but four are actively operational. The solution encountered by the overhead hot air becomes granular. This granular soil called masse is pressed at a pressure of 300 bar. The brittle tiles, called binders, are cooked by heating. ceramic production is completed using glass and pattern drawing. **[5]**

3.3.2 Cogeneration System of The Organization

Aegean United Energy Electricity Generation Inc. Aegean Combined Energy Inc. has three gas turbines in two cogeneration plants. The first plant has one 4.6 MW Solar Taurus 60 turbine and the second plant has two 4.24 MW Solar Centaur 50 turbines. For the efficiency of the units, it is necessary to generate the most electricity with the least fuel.

At 14.5 bar, natural gas coming from the RMS-B pressure reduction station of the Energy Directorate is sprayed from the nozzles with the main fuel valve and the combustion air sucked from the filter. This combustion; This causes the turbine blades to be rotated at a speed of 15000 rpm, the first movement of which is carried out by a start motor. Thus, a movement energy is obtained as a result of this process. This movement is transmitted to the alternator by means of a shaft. Electrical energy is also obtained from the alternator. The electrical energy obtained from all three turbines feeds the main busbar in our power plant. This busbar is also connected to the TEDAŞ electrical grid by means

of a coupling. From this bar, the electrical energy needs of the factory are met. The hot gas produced as a result of combustion in the combustion chamber is discharged from the exhaust. This gas is delivered to a total of seven spray-dryers in masse preparation plants via pipelines connected to the exhaust. Here, the heat energy normally obtained by burning natural gas is used without the use of fuel or in a much lesser amount to produce the same heat energy. A portion of the hot gas exhausted from the exhaust is also conveyed by pipelines to two heat exchangers and converted into hot water. It meets the hot water and heating needs of the refectory, housing and administrative buildings with the hot water circulation pump at 90 ° C obtained in the first of these heat exchangers. The hot water at 135 ° C obtained from the second heat exchanger provides the desired heat energy in the boiler room in the Ege Vitrifiye factory again with the circulation pump. **[5]**

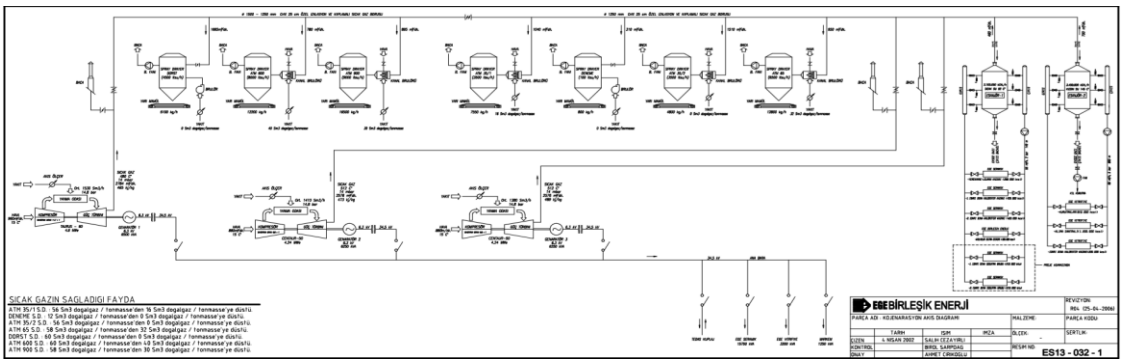

Figure 2: Ege Seramik Cogeneration System Flow Diagram

3.4 Components of Cogeneration System

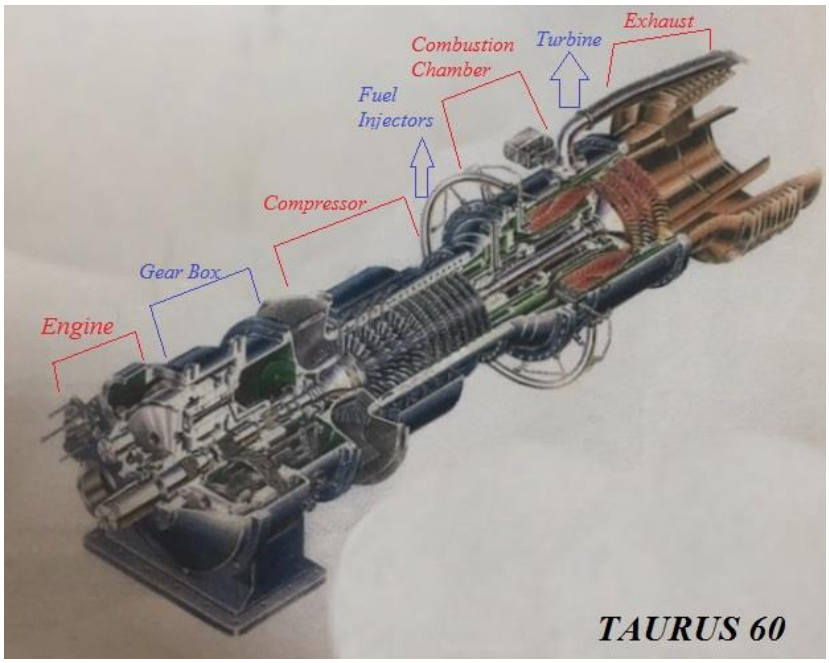

Figure 3: Componenets of Turbine Taurus 60

3.4.1 Engine

Gas turbine engines provide the rotational movement by compressing the compressed air in the rotating compressor by burning the fuel-air mixture in the combustion chamber and expanding the obtained gas in the turbine. When the engine is started for the first time, the engine provides the power to rotate the turbine at 4,000 rpm.

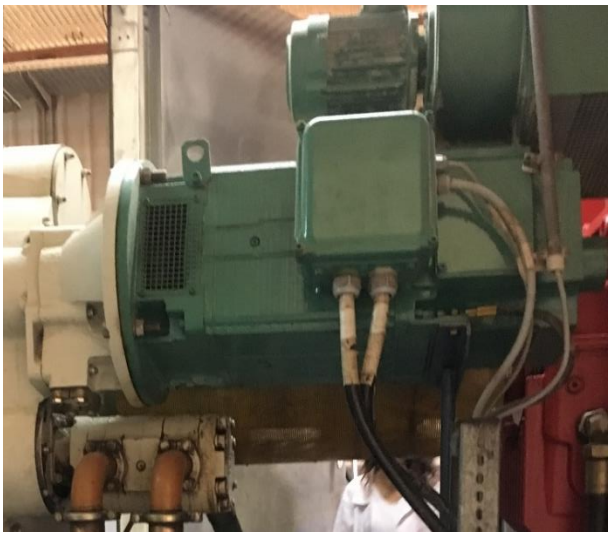

Figure 4: Engine

3.4.2 Gearbox

The gearbox is a mechanical device used to increase/decrease torque through speed reduction / increase. The gearbox connects the motor to the compressor. Its main purpose is to reduce the rotation. It helps to compress the air.

Figure 5: Gearbox

3.4.3 Compressor

The compressor is responsible for the efficient delivery of all the air the turbine needs and the main purpose of the compressor is to compress the air. The compressor raises the pressure from 1 bar to about 13-14 bar.

Figure 6: Compressor

3.4.4 Fuel Injectors

The purpose of the fuel injector is to deliver and inject the appropriate amount of fuel at the appropriate time.The fuel of the gas turbine in the factory is natural gas. It is an excellent fuel in terms of combustion properties compared to natural gas, coal and fuel oil.Natural gas is a colorless and odorless gas. Since its leakage cannot be noticed due to its odorless nature, it is specially odorized before its distribution.

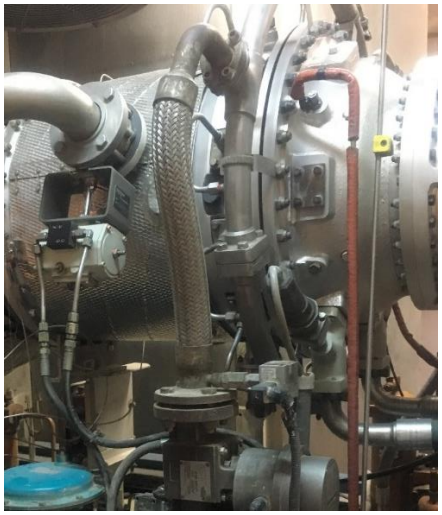

Figure 7: Fuel Injectors

3.4.5 Combustion Chamber

Combustion chambers of gas turbines are the part where the air and fuel supplied by the compressor are mixed and burned. Expanding air with released heat advances in turbine. Combustion process; The static pressure is increased by slowing down the air at high speeds exiting the compressor. The speed of combustion varies depending on the intended use of the turbine, and a low speed zone is created to prevent the extinction of combustion at low speeds.

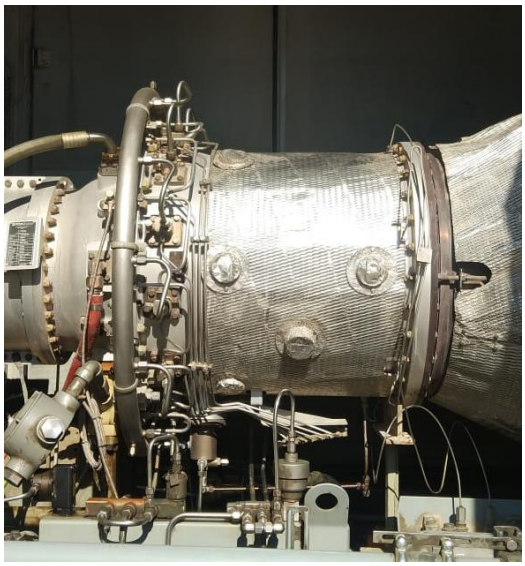

Figure 8: Combustion Chamber

3.4.6 Turbine

Gas turbines, an internal combustion engine type, operate with the logic of converting the energy generated by the combustion of compressed air and fuel into a rotational movement. Turbine is the part of all mechanical energy obtained for the production of electrical energy. The turbine stator blades, together with the turbine rotor blades, convert the thermal energy in the hot gas into mechanical energy. The resulting high temperature exhaust gas provides flow to the exhaust duct. There are three gas turbines in Ege Seramik. The first turbine is the 4.6 MW Solar Taurus 60 turbine and the other two are the 4.24 MW Solar Centaur 50 turbine. Two of them meet the need and the third turbine is passive. The turbine oil pressure is between 1.7 and 6 bar. Turbine is 1.8 bar at first start, 2.8 bar during firing and 3.8 bar at full load. **[5]**

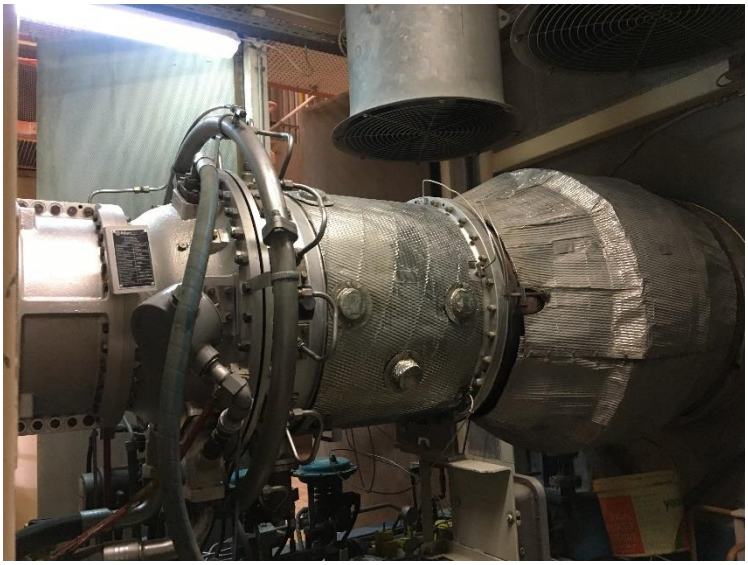

Figure 9:Turbine

3.4.7 Exhaust

It is the part that provides the discharge of the gas working in the turbine to the outside.

Figure 10: Exhaust

Exhaust from the turbine

- The hot air (exhaust) exiting the turbine is absorbed by ATM 200, ATM 65, ATM 35/2, ATM 35/1 sprayers with the help of suction fans and used for drying raw materials.
- When not used by sprayers, it is thrown out of the chimney or helps to feed Ege Vitrifiye.
- There are 2 heat exchangers at the exhaust outlet. In this heat exchanger, superheated steam is obtained and sent to Ege Seramik and Ege Vitrifiye.

Figure 11: Spray Dryers

3.4.8 Transformers

Transformers are electrical machines that do not have any moving parts that raise or lower the voltage of the electrical energy without changing its frequency. The transformers are divided into different types according to the phase number, core type, operating environment and the way the voltage is increased and decreased. Electricity is increased from 6,300 V to 34,500 V at the turbine inlet thanks to the booster transformer. In addition, one of the strain relief transformers reduces electricity from 34,500 V to 400 V for factory use.

Figure 12: Transformer

3.4.9 Alternator

Alternating current generators that convert mechanical energy into electrical energy are called alternators. The generated power is transmitted to the alternator and the input to the alternator is 6.3 KW and the output is 4.2 MW.

Figure 13: Alternator

3.4.10 Heat Exchanger

Machines that have the ability to transfer heat through the opposite surfaces of the heat exchanger plates of different fluids without interfering with each other are called heat exchangers. The cold water entering the system is heated by the hot pipes in the heat exchanger. The maximum surface area should be increased to increase the heat transfer, so the number of pipes is increased. The water is heated to 820C and 1200C.

3.5 DAY-AHEAD MARKET

Electricity Markets Inc. There are three separate markets managed by.

1- Day ahead market
2- Intraday market
3- Balancing power market

Ege Seramik uses Day Ahead Market, which has the highest trading volume of these three markets in order to balance electricity production and consumption. In the day ahead market, the goal is to achieve a supply-demand balance on an hourly basis between electricity producers and electricity consumers (distribution companies, wholesale

companies) 1 day in advance. In this way, it is aimed to generate electricity as much as the market need. **[5]**

Producer and consumer legal entities, which are market participants, enter bids for the relevant day, either by hour or by block, until 11:30 am, 1 day before the day. When creating these offers; Market participants that are electricity producers take into account the costs of electricity generation and consumer market participants (distribution and wholesale companies) take into account the sales prices to their customers. After the offers entered in the market manager web portal of Epiaş , the intersection point of the supply demand curve for each hour is determined as the market clearing price of that hour and it is announced as the next day's prices at 13:30. Participants buy or sell in amounts determined according to their quotes and market clearing prices. If more or less occurs, an imbalance occurs. The buy or sell quantities between the price levels are linearly proportional.

4. Assessment of the Internship

Knowledge and skills you need to assess	***(yes)***	***(partial)***	***(no)***
Ability to work efficiently in intra-disciplinary and multi-disciplinary teams; ability to work individually.		X	
Individually, thermodynamic analysis of the cogeneration system was studied. Efficiency and working principles of system components were investigated. We did not perform any projects as a group.			
Ability to write report and understand written reports effectively, to prepare design and product reports, to conduct effective presentations, and to give and receive clear and understandable instructions.	X		
The instructions given were fulfilled. A report was prepared about the internship and the system. Presented to the responsible engineer. In some parts, assistance was received from the engineer. No additional presentations were made to the company.			
Acting in accordance with ethical principles, consciousness of professional and ethical responsibility; knowledge of the standards used in engineering practice.	X		

The employees are informed about the business ethics and the rules of the factory. Employees behave in accordance with business ethics. Improper actions can lead to dismissal in line with the consequences. In addition, every worker involved in the relevant departments has responsibilities. For example, the person in charge of the power plant should switch the system to island mode in bad weather. If there is a power failure due to TEDAS at the plant, the necessary circuit breakers must be switched on and voluntary island mode should be left if the connection does not improve. Ege Seramik is the first company in its sector to receive ISO 9001 certificate. ISO 14001 Environmental Management System Certificate, which enables production to be carried out by considering environmental impacts in every step from the first stage of the product to the consumer, is another document owned by the company. Global Security Verification (GSV) has documented the security of employees in processes such as safety of employees, management of warehouse shipping areas, physical security of the factory, loading operations, electronic data circulation and logistics. Turkish Standards Institute (TSE) by the 'TSE Double Star' 'with the document, including but not limited to the minimum requirement of the Aegean Ceramic products in Turkey, was confirmed to have the properties on the specifications of the standard in Europe and America. Information Security Management System was established by implementing the policies and procedures in TSE ISO IEC 27001 standard. Through this system, the awareness of all employees and interested parties has been increased and the protection shield on information resources has been strengthened.

Knowledge about business life practices such as project management, risk management, and change management; awareness of entrepreneurship and innovation; knowledge of sustainable development.	X		

Ege Seramik is a factory open to innovations and trying to improve itself. Generally, works are made to improve the production in the factory. Ege Seramik, more than 150 authorized dealers and secondary markets over 2 thousand in Turkey has a strong distribution channel with the dealer. At the same time, it continues to increase its strength in foreign markets with its exports to more than 50 countries. The needs and processes of all markets are met with a product portfolio that is renewed and follows the trends closely.

COMPANY MISSION;

- With our products manufactured in international standards,
- To serve the developing construction sector of our country,
- To steer the sector with our innovative and creative activities,
- Participate in social projects whenever and when possible,
- Our aim is to respect the nature and environment, the rights of our stakeholders and interested parties and national / international laws and regulations by targeting profitability.

COMPANY VISION;

- With the activities we have started by using and expanding our knowledge and expertise;
- To be a reliable GLOBAL (GLOBAL & LOCAL) player in ceramic coating markets.
- To reach higher limits in total customer satisfaction.

• Not being a segment manufacturer, being profit oriented, developing in a way to increase our market share and providing sustainable growth in revenue, • Being up to date in the sector by applying the innovations brought by the world of technology, • To invest in the future with an understanding of environmental sustainability.			
Knowledge about contemporary issues and the global and societal effects of engineering practices on health, environment, and safety; awareness of the legal consequences of engineering solutions.	X		
Employees are regularly informed about occupational health. Many measures have been taken to prevent occupational accidents. The necessary safety precautions are taken for the tools used. It is very important for Ege Seramik to take the necessary measures to minimize the negative impacts on the environment during all kinds of activities for a sustainable and open future, to guide the employees on occupational health and safety issues in all departments, and to take occupational health and safety measures at the workplace. It is located. The Occupational Health and Safety Board meets monthly and ensures the continuity of the safe working environment. The Workplace Health Unit serves full-time employees. The company has one fire truck and trained personnel.			

5. Conclusions of the Report

The amount of energy consumed in proportion to the increasing population has increased, and this increasing need has led us to work towards more efficient use of energy. One of these studies is the cogeneration system. heat and electricity are produced in the same place on the same system. It is more economical and advantageous than producing heat and electricity separately. Energy production by cogeneration reduces methane and nicoxide emissions as well as carbon dioxide, which causes global warming. Moreover, it also reduces the nitrogen and sulfur oxide content that causes acid rain. That's why I chose to do an internship in this field. I completed my internship at Ege Seramik. By examining the system, it was taught how to use the hot air produced by cogeneration power efficiently. The components of the system, objectives and working principles were learned and studied in the field. Mass balance, entropy balance, energy balance and efficiency of the system with thermodynamic analysis system were calculated. Turbine and units in the system should be checked frequently in order to minimize the losses of the system whose efficiency is calculated. It may fall due to loss of efficiency of power plants. Valid for sea level and 15 degree temperature. Turbine production is also changing under changing conditions. In summer, turbine production drops due to weather conditions. In winter, there is an increase in turbine production in Kemalpaşa weather conditions that reach negative temperatures. When the weather is bad, island mode is turned on to prevent overloading or to prevent impacts on the turbines. In

Island mode, the connection with TEDAŞ has been lost. Only the generated electricity is used.

RESOURCES

1. www.mosbenerji.com.tr
2. Thermodynamics An Engineering Approach, Yunus A. Cengel, Michael A.Boles,2015
3. http://www.code-electrical.com/historyofelectricity.html
4. Wartsila Technical Journal, 01.2011
5. Wartsila 50DF Product Guide
6. https://mysolar.cat.com/